Motion detector - Professional Line

IS 2360-3 ECO 24m

white
EAN 4007841 057770
Article number 057770
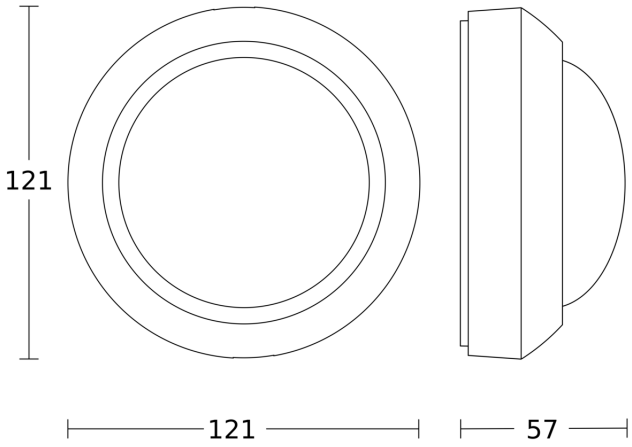
Dimension Drawing